Article written by Mr. M. Ramani, MD, MODUTEC – Published in COSMA News March 2018

Leverage Type Tested Modular Switchboard Enclosures to scale your MV business too

The LV Panel Industry in India can broadly be categorised under A, B & C Category. The A Category are the ones with IEC 61439 Type Test certification, seldom by themselves and mostly through Switchgear Principal alliances. Normally, they would have the ability to also deliver Switchboard solutions with PLC, DG Sync and VFD Drives range of solutions and the like. Thanks to their own design or those acquired by the Principal Partnerships, they would normally have upgraded from the welded panels to modular design enclosures.

Schneider with Blockset, ABB with Ar tu, Siemens with Siepan, L&T with TI and Legrand with XL3 are all modular designed Panels and have partnered with such A Category Panel Builders in different parts of the Country. The Panel Builder in these cases avail of the Type Tested design of the Switchgear Manufacturer without having to undergo the cumbersome process of Type Testing themselves. The Switchgear Manufacturer takes the responsibility to institutionalize these manufacturing processes in the produce of these partners. The Customer and End User thus rest assured of the predictable quality they experience and this results in a WIN-WIN-WIN.

The B Category Panel Builder is yet to graduate from the IEC 60439 partially Type Tested Panels and is generally also in the conventional welded design of Panels. The C Category and these are the largest in numbers and spread across the entire geography of the sub-continent are mostly the not so educated class, but experienced in their own ways to serve the needs of putting a Switchboard together for their local markets. They have no standardisation, are completely custom

requirement driven and also seldom venture into the scheme, interlocks and specialized control circuit solution areas. They are of course mostly in the welded panel manufacturing category and their business model is relationship driven.

Unlike this scenario, when we look at advanced countries, the preference is clearly for modular switchboard enclosure systems and this is led by CUBIC, ELSTEEL, LOGSTRUP and many more.

The design is generally made of a frame that gets built with just 2 punched and bent profiles. This skeleton then gets embellished with the partitions, bus bar supports and doors etc. This helps simplify, standardise and scale the Panel Builder's business.

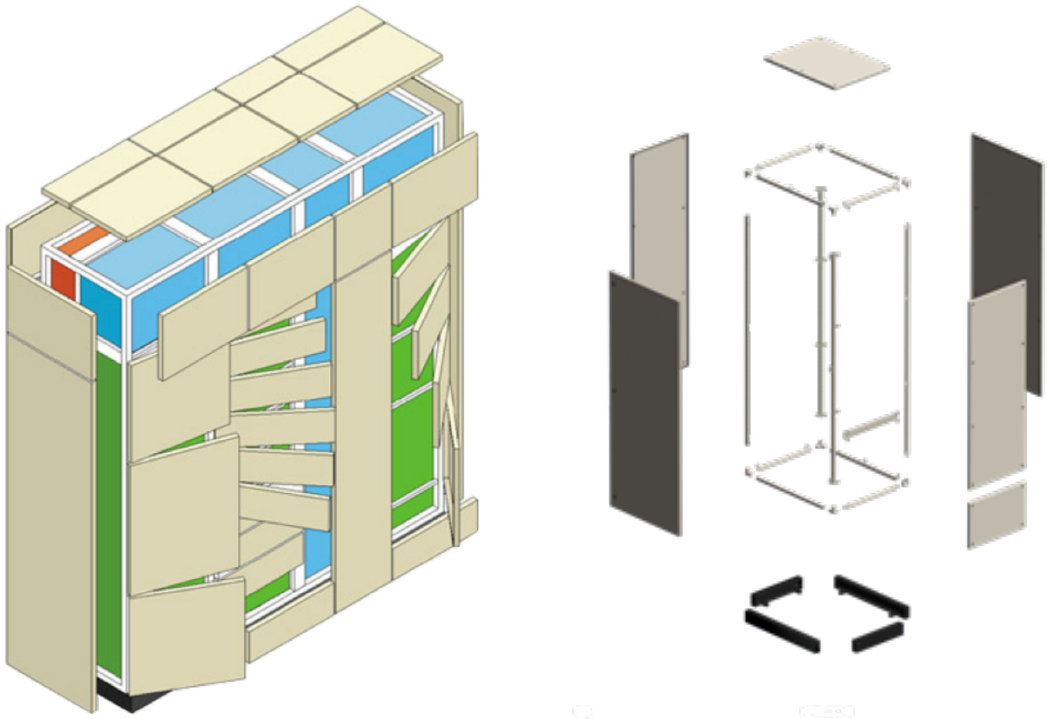

Another trend abroad, in that the typical Panel Builder is focused only on his core competency of 'electricals' while he outsources his requirements of 'mechanicals'. In India too, Schneider are on the threshold of introducing the Prisma Switchboards with a HUB & SPOKE Model; ie a central point of Enclosure manufacturing and several Alliance Partners in different parts of the Country to assemble these Type Tested Enclosures with their switchgear. Economies of scale for each therefore bring out the best value for the Customer techno-commercially.

For Switchgear manufacturers like the Korean LSIS, when they wanted to enter the projects and solutions business in the Middle East, Myanmar and other locations, they have partnered with ELSTEEL and this arrangement has helped them scale their Switchgear sales as well. Rittal in India are similarly tying up with certain Panel Builders, mostly in the System Integration space to market their enclosure systems.

Now, the idea that I feel we should look at is why not replicate the same economies of scale concept marrying the strengths of a modular design of Switchboard enclosure with the exacting and Type tested needs of a Medium Voltage Switchboard?

The majority of the MV Panel requirement follows a particular rhythm of compartmentalization, of Type Testing as per IEC 62271-200 and then the Internal Arc Test. Variants to these would be the double bus bar arrangement & the 2 tier VCB arrangement but such as these are in lesser frequency. However, these too could be catered to from a modular design concept to individual Panel Builder specification.

On close examination, we will find that in most cases a typical pattern is followed in MV Switchboards such as

1. There are broadly 4 compartments
    a. The VCB Switchgear compartment
    b. The Bus Bar Compartment
    c. The Cable Chamber comprising of the CTs, PTs and the cable termination area etc.
    d. The LV Chamber which comprises of the Metering, Protection relays, etc.
2. The Internal Arc Test is mainly for the MV compartments of a, b & c above.
3. Each of the above 3 compartments have to be air tight to enable the gases generated from the possible internal arc in any of these 3 compartments, to open the respective pressure flap on top of the Panel. When & if this happens, the resultant gases are channelized out, thus protecting the blasting off of the Switchboard door and flying of parts, on to the operating personnel in front, rear and sides of the panel, to comply with AFLR internal arc classification.

SWITCHGEAR PANEL WITH CASSETTE TYPE DRAWOUT VCB - 12 kV

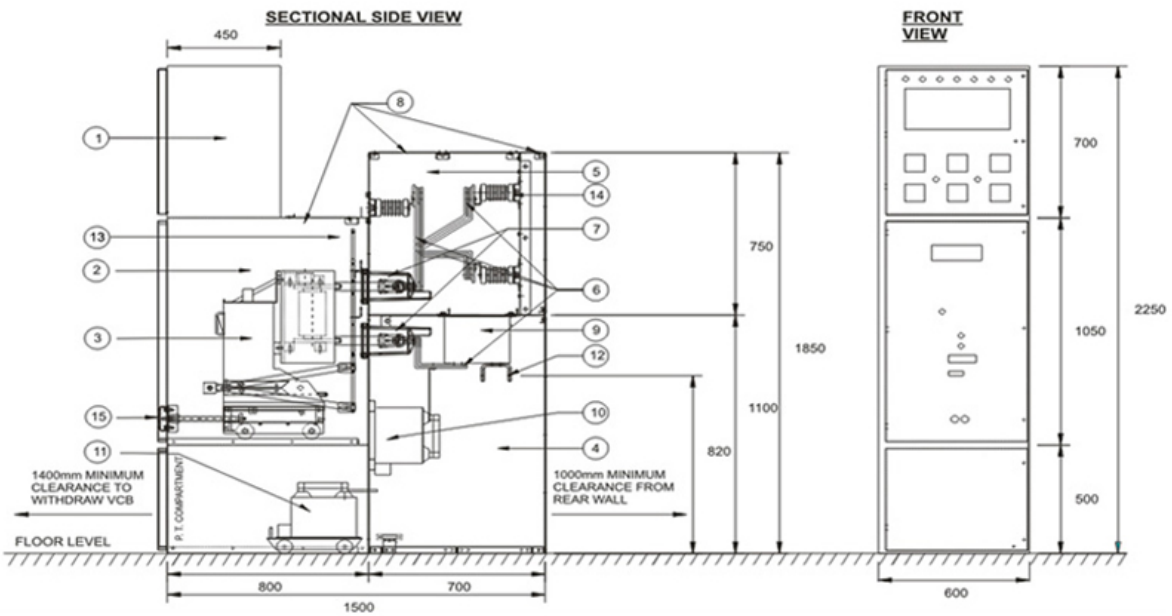

1 — L.T. Compartment
2 — C.B. Compartment
3 — Vacuum Circuit Breaker
4 — Cable Compartment
5 — Bus Bar Compartment
6 — Bus Bars
7 — Epoxy Bushing
8 — Explosion Flaps
9 — C.T
10 — Fix Type P.T.
11 — Draw Out P.T.
12 — Cable Terminal
13 — Shutters
14 — Stud Insulator
15 — Drive Box

We should first separate the VCB into a separate air tight module as a “Power Module”. This comprises of the bare VCB as supplied by the VCB Manufacturer. Using the modular design, one could then further develop the draw out mechanism for this VCB with the shutter assembly and spouts to take the 3 poles of the VCB out onto the Bus Bar Chamber on top and the below 3 poles into the cable chamber as shown in the picture above.

This VCB module can then sit on the modular frame at the bottom as well as at the back. The bus bar compartment on top also has to be completely segregated by a sheet metal partition that keeps the section air tight and mechanically robust to help withstand the short circuit

currents as designed for. Accordingly, the outgoing cable chamber automatically becomes air tight and internal arc fault ready.

Handling of internal arc situations does not get limited to designing the panel to withstand the internal pressure developed during such a fault. It also extends to the subject of disposing these off. This gets done by carrying the arc products to a much safer place away from the people. This would involve adding the arc ducts over and above the standard MV panel. This carries away the arc products and also cools and absorbs the arc energy as it travels in the arc duct. Design and supply of arc ducts to suit specific installation site conditions should be taken up based on specific customer requirements.

Thus, the modular 11kV VCB Basic Kit emerges as a possibility to follow in the footsteps of the LV Enclosure partnering methodology. These too can be shipped as a Flat Pack with the VCB and accessories separately packed. An instruction manual could then assist the Panel Builder in putting the MV Switchboard together along with the Breaker draw out mechanism, the shutter assembly, the spouts with a provision to mount the bus bars. In the cable chamber, the CTs can be fitted as required & PTs could also be similarly mounted. On top of the VCB Power Module, the LT Chamber can then be fabricated/ sourced by the Panel Builder and mounted. This would be dimensioned based on the height considering the number of relays and meters the specific project requirement would need.

The significant advantages & benefits that the use of the modular 11kV to 33 kV VCB Basic Kit would deliver to the Panel Builder are:

1. The Panel Builder need not have his own design of MV Switchboard.
2. He does not have to even Type Test the Panel as this would have been done by the Switchgear Manufacturer along with the modular enclosure manufacturer. The design would be as per IEC 62271-200 and could also be with Internal Arc certification, to boot.
3. He only needs to add the CTs, PTs, Bus Bars, LT Chamber with the required meters, relays etc and have the same duly wired as per the Customer approved scheme.
4. This would bring costs down, enhance speed in delivery and enable the value chain go up through his 3rd level of value addition with due customization.

5. The offer being modular in design and flat pack would enable Panel Builders across the Globe to avail of this offering with least freight cost.

So, what such an approach could facilitate is, inspiring the LV Switchboard manufacturer to upgrade his manufacturing capability to include a range of MV switchboards as well. Thus, a centralized mechanical modular Basic Kit manufacturing facility, could serve the needs of several Partner Switchboard manufacturers who could just assemble these flat packs in their facility. This would empower them to enable Type Tested MV Panel Enclosure systems, reach their Customers without actually spending money in this expensive and specialized Type Testing.

The further benefits of this arrangement would be that

1. The resultant sales of the MV Switchgear would go up in geometric proportions.
2. Basic Kits sale would also get enhanced significantly as there is huge value for money proposition in it.
3. The Panel Builder would be supported with prompt and off the shelf delivery.
4. Instruction Manuals would help the smooth installation of the Flat Pack system.
5. Educational marketing will need to be initiated at every significant partner factory to catalyse the comfort level of their teams in implementing this Basic Kit concept.

All this concept, could greatly help in reaching LV & MV Switchboard solutions to a larger electrical installation base in an organized, economical and authentic manner. Done well, this has the potential, to scale the Switchgear sales significantly and render the availability of Type tested MV & LV Switchboard solutions through multiple partners to a larger and wide spread Customer base.

It takes a lot to electrify India. And the un-electrified parts of our Country and also the world, can’t wait!

Ramani
Managing Director
MODUTEC Ready Panels Pvt Ltd,
1,2 & 3, Ashwath Industrial Estate,
Uttari Road, Kaggalipura, Off Kanakapura Road,
Bangalore 560082, India.